PROPRIETARY RIGHTS ARE CLAIMED FOR THE MATERIAL DISCLOSED IN THIS DRAWING.

LTR.	REVISIONS	DATE
**	**********	00-00-98

POSITIVE TERMINAL

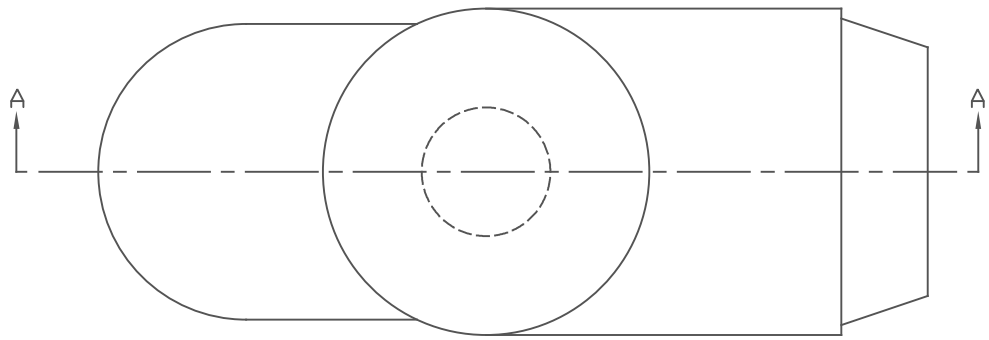

(1) 731N7V02 KIT CONTAINS THE FOLLOWING

QUANTITY	PART #	DESCRIPTION
1	600N7V02	BATTERY TERMINAL CAP
1	632NPV02	BATTERY TERMINAL BASE

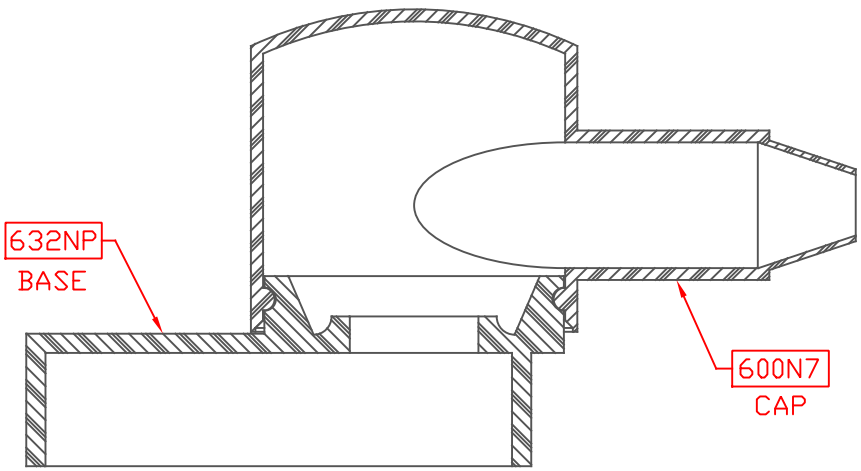

SECTION A-A

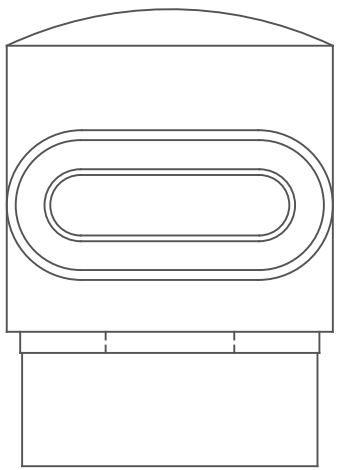

Material:	RED PVC
Material Part No	9812-65-RED683
Max. Opertating Temp:	105 C
Shore Durometer	"A" 10 SEC. 67/62
Specific Gravity:	1.34
Ult. Elongation %:	475
Brittle Temp:	-44 C
Tensile Strength PSI:	1547 PSI
Dielectric Strength, v./ml	540
U.L. Rating:	94 V2
MEETS:	FMVSS.302

0 10 20 25.4
0 1/2" 1"
SCALE = FULL

VTE Incorporated
5437 Robinson Road, P.O. Box 790
Pellston, Michigan 49769
Telephone: 1-800-527-9256, 231-539-8000
FAX: 231-539-0914

REF:	DATE: 5-4-98	DRN BY: JC CHK'D BY:	WEIGHT: ****
TITLE: MARINE BATTERY TERMINAL BOOT ASSEMBLY			
MATERIAL:		PART NO. 731N7V02	
COLOR:	DRG CLASS		