THE INFORMATION CONTAINED IN THIS DRAWING IS THE SOLE PROPERTY OF VTE INCORPORATED. ANY REPRODUCTION IN PART OR WHOLE WITHOUT THE WRITTEN PERMISSION OF VTE INCORPORATED IS PROHIBITED.VTE MAKES NO WARRANTY, EXPRESSED OR IMPLIED, AS TO THE SUITABILITY OF A PRODUCT FOR ANY INTENDED USE. THE CUSTOMER SHALL BEAR THE SOLE RESPONSIBILITY OF DETERMINING THE SUITABILITY OF ANY VTE PRODUCT FOR ITS END USE.

LTR.	REVISIONS	DATE

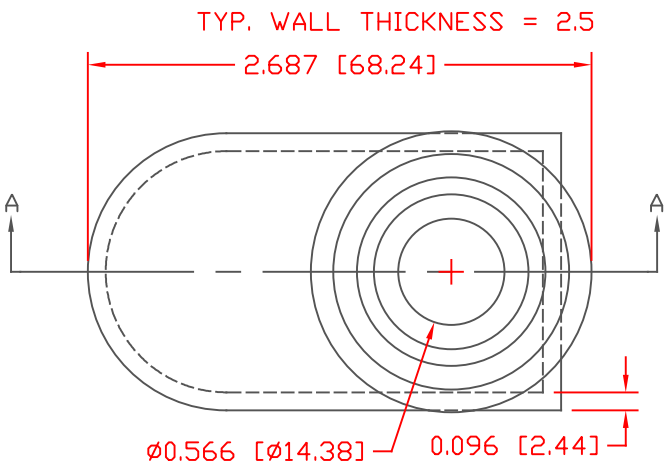

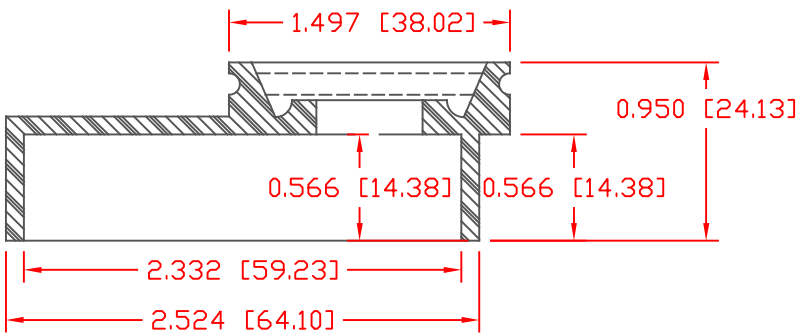

SECTION A-A

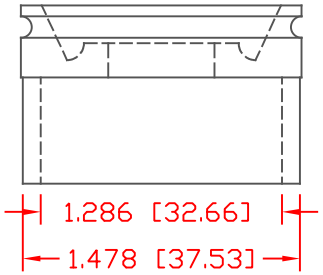

SCALE FACTOR : NONE
ALL DIMENSIONS GIVEN AS: in [mm]
TOLERANCES UNLESS OTHERWISE SPECIFIED :
MOLDED PARTS: ±.030" [±0.8mm]
ALL ANGLES ARE ± 1 DEGREE

VTE Material Part No:	1101650114
Material:	BLACK PVC
Material Part No	9812-65
Max. Opertating Temp:	105 C
Shore Durometer	"A" 10 SEC. 67/63
Specific Gravity:	1.33
Ult. Elongation %:	520
Brittle Temp:	-36 C
Tensile Strength PSI:	1563 PSI
U.L. Rating:	94 V2
MEETS:	FMVSS.302

VTE Incorporated
5437 Robinson Road, P.O. Box 790
Pellston, Michigan 49769
Telephone: 1-800-527-9256, 231-539-8000
FAX: 231-539-0914

REF:	DATE: 4-8-98	DRN BY: JC CHK'D BY:	WEIGHT: .044 LBS. / 20 G.
TITLE: MARINE BATTERY TERMINAL BOOT BASE			
MATERIAL: PVC		PART NO. 632NNV14	
COLOR: Black	DRG CLASS		