PROPRIETARY RIGHTS ARE CLAIMED FOR THE MATERIAL DISCLOSED IN THIS DRAWING.

TYP. WALL THICKNESS = 2.5

LTR.	REVISIONS	DATE
⋊⋉	**********	00-00-98

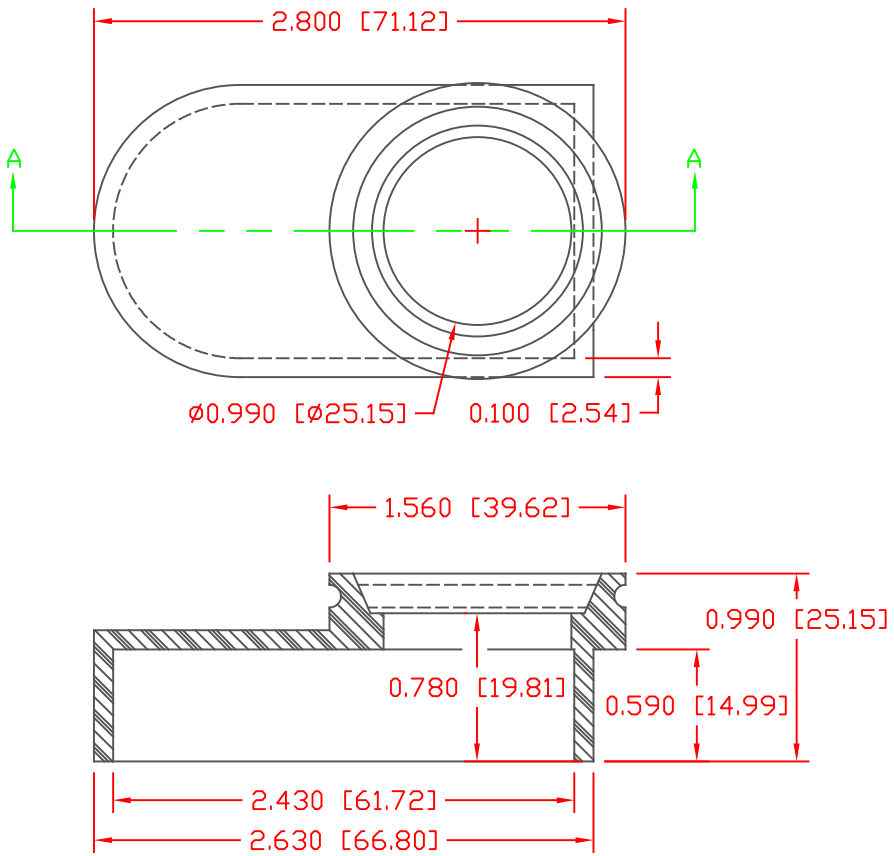

UNIVERSAL TERMINAL

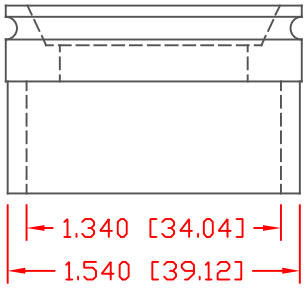

TOLERANCE UNLESS OTHERWISE SPECIFIED: ±.030"/±0.8mm
RADIAL DIAMETERS TO BE MEASURED OVER MANDRELS,
RING GAGES OR PIN GAGES OF SUITABLE SIZE

SECTION A-A

VTE Material Part No:	1101650114
Material:	BLACK PVC
Material Part No	9812-65
Max. Opertating Temp:	105 C
Shore Durometer	"A" 10 SEC. 67/63
Specific Gravity:	1.33
Ult. Elongation %:	520
Brittle Temp:	-36 C
Tensile Strength PSI:	1563 PSI
U.L. Rating:	94 V2
MEETS:	FMVSS.302

VTE Incorporated
5437 Robinson Road, P.O. Box 790
Pellston, Michigan 49769
Telephone: 1-800-527-9256, 231-539-8000
FAX: 231-539-0914

REF:	DATE: 4-8-98	DRN BY: JC	WEIGHT:
		CHK'D BY:	.044 LBS. / 20 G.
TITLE: MARINE BATTERY TERMINAL BOOT BASE			
MATERIAL:		PART NO. 632N□V14	
COLOR:	DRG CLASS		